LFM550M Series

Application Note V12 October 2025

550W AC-DC Power Supply with PFC
LFM550M Series
APPLICATION NOTE

Approved By:

Department	Approved By	Checked By	Written By
Research and Development Department	Ovid	Calvin	Jeter
Design Quality Department	Benny	JoJo	

LFM550M Series

Application Note V12 October 2025

Content

1. INTRODUCTION **3**

2. ELECTRICAL BLOCK DIAGRAM **3**

3. MAIN FEATURES AND FUNCTIONS **4**

3.1 Operating Temperature Range 4

3.2 Output Protection (Over Current Protection) 4

3.3 Life-Time Calculation of Capacitors 4

4. APPLICATIONS **4**

4.1 Test Set-Up 4

4.2 Output Ripple and Noise Measurement 5

4.3 Installation Instruction 5

4.4 External Baseplate Cooling 6

4.5 EMI Test 7

4.6 Mating Connectors 7

5. PACKING INFORMATION **8**

LFM550M Series

Application Note V12 October 2025

1. Introduction

This application note describes the features and functions of Cincon's LFM550M series power module. These are highly efficient, reliable, compact, high-power density, single output AC/DC power modules. The module is fully protected against short circuit and over-voltage conditions. Cincon's world class automated manufacturing methods, together with an extensive testing and qualification program, ensure that the LFM550M series power module is extremely reliable.

2. Electrical Block Diagram

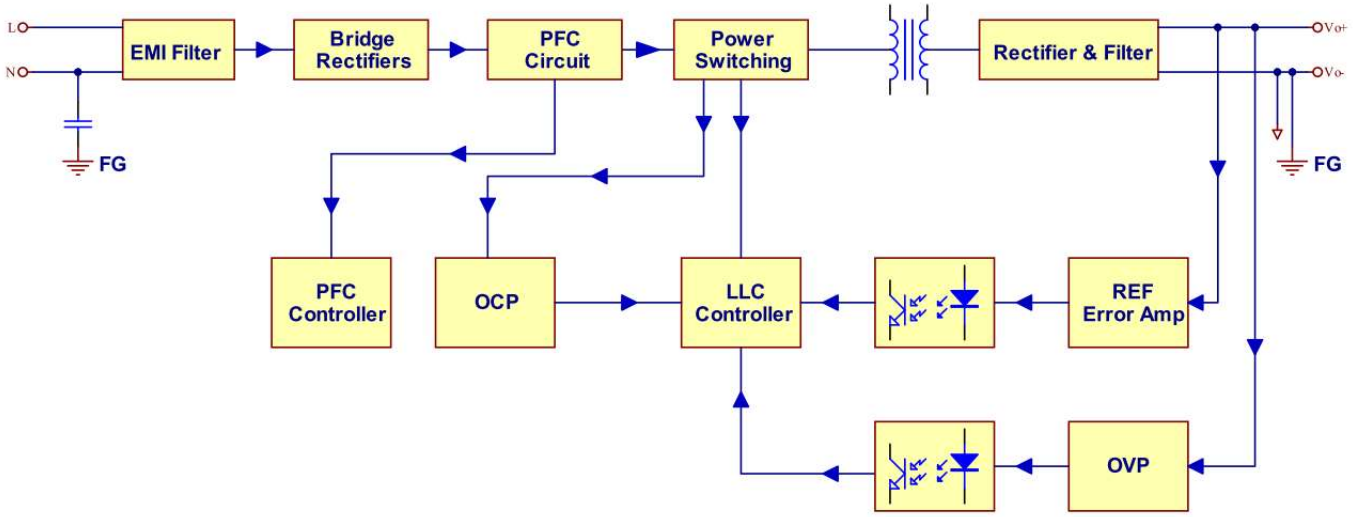

3. Main Features and Functions

3.1 Operating Temperature Range

The highly efficient design of Cincon's LFM550M series power modules has resulted in their ability to operate within ambient temperature environments from -40℃ to 80℃. Due consideration must be given to the de-rating curves when ascertaining the maximum power that can be drawn from the module. The maximum power which can be drawn is influenced by a number of factors, such as:

- Input voltage range
- Permissible output load (per derating curve)
- Effective heat sinks

3.2 Output Protection (Over Current Protection)

The power modules provide full continuous short-circuit protection. The unit will auto recover once the short circuit is removed. To provide protection in a fault condition, the unit is equipped with internal over-current protection range, please refer to the specification sheet. The unit will operate normally once the fault condition is removed.

3.3 Life-Time Calculation of Capacitors

Conduction Cooling ($110V_{ac}$)	Output Voltage							
75% Load 40℃	12V	15V	24V	28V	30V	36V	48V	54
Life Time (khours)	72	97	91	116	97	108	99	107

Fan Cooling ($110V_{ac}$)	Output Voltage							
75% Load 40℃	12V	15V	24V	28V	30V	36V	48V	54V
Life Time (khours)	181	160	151	150	173	145	148	139

Note:

The maximum lifetime of electrolytic and polymer capacitors is 15 years, according to the component datasheets.

4. Applications

4.1 Test Set-Up

The basic test set-up to measure parameters such as efficiency and load regulation is shown in Figure 1. When testing the Cincon's LFM550M series under any transient conditions, please ensure that the transient response of the source is sufficient to power the equipment under test. We can calculate the

- Efficiency
- Load regulation and line regulation

The value of efficiency is defined as:

$$\eta = \frac{V_o \times I_o}{V_{in} \times I_{in}} \times 100\%$$

Where:

V_o is output voltage,
I_o is output current,
V_{in} is input voltage,
I_{in} is input current

The value of load regulation is defined as:

$$Load\ reg. = \frac{V_1 - V_2}{V_2} \times 100\%$$

Where:

V1 is the output voltage at full load
V2 is the output voltage at 10% load

The value of line regulation is defined as:

$$Line\ reg. = \frac{V_{HL} - V_{LL}}{V_{LL}} \times 100\%$$

Where:

V_{HL} is the output voltage of maximum input voltage at full load
V_{LL} is the output voltage of minimum input voltage at full load

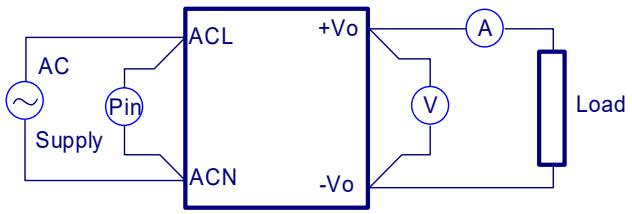

Figure 1. LFM550M Series Test Setup

4.2 Output Ripple and Noise Measurement

The test set-up for noise and ripple measurements is shown in Figure 2. Measured method:

Add a C2=0.1uF ceramic capacitor and a C1=10uF electrolytic capacitor to output at 20 MHz Band Width.

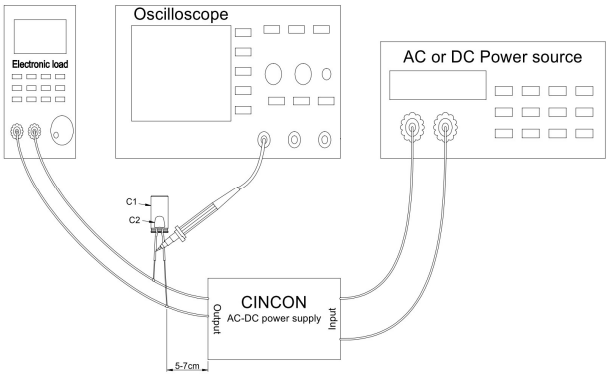

Figure 2. Output Voltage Ripple and Noise Measurement Set-Up

4.3 Installation Instruction

The LFM550M series provide the baseplate cooling for customer to increasing heat dissipation. Please refer to the following figure for installation.

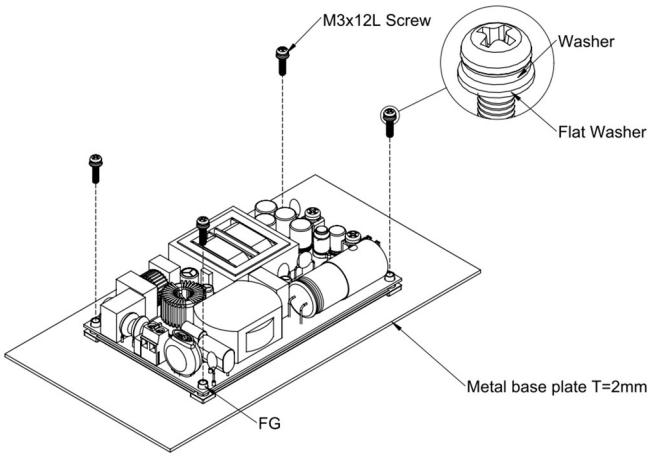

LFM550MXXXB Installation Diagram

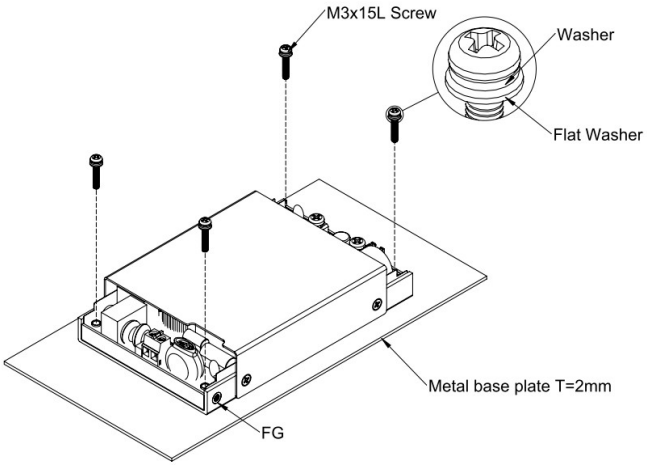

LFM550MXXXC Installation Diagram

Note:

M3 screw head and washer diameter shall not exceed 5.5mm. M3 torque is 4 kgf-cm max.

Please allow 4mm side clearance from the components and all side of the PCB. Allow 5mm clearance above the highest parts on the PCB. Be especially careful to allow 5mm between the solder side of the PCB and the mounting surface. If the clearances are not sufficient the specifications for isolation and withstand will not be valid.

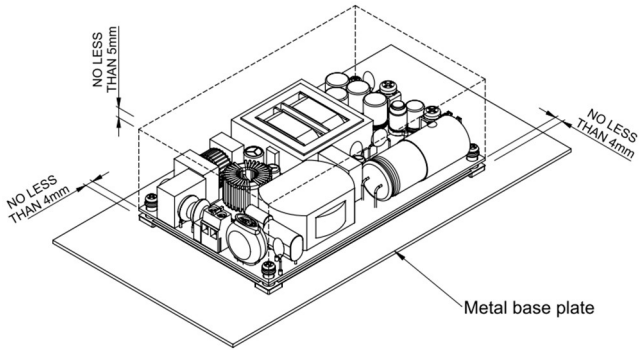

LFM550MXXXB Installation Diagram

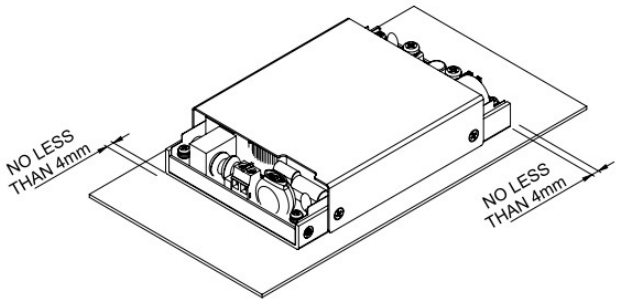

LFM550MXXXC Installation Diagram

The LFM550M FG should be connected to the earth (ground) terminal of the apparatus for Figure 3 and Figure 4, or can be used in the end-equipment connected to the earth (ground) terminal of the apparatus for Figure 5 and Figure 6.

If not the conducted noise and output noise will increase.

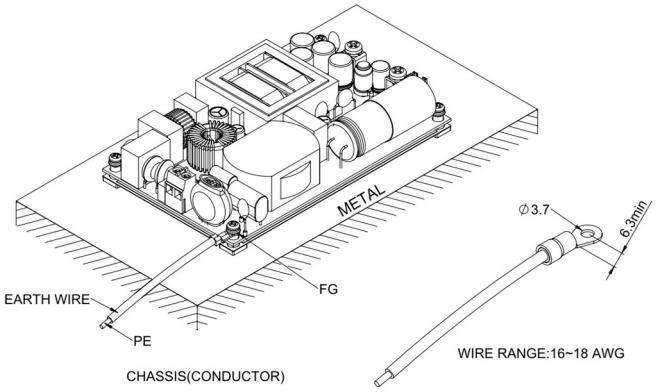

Figure 3

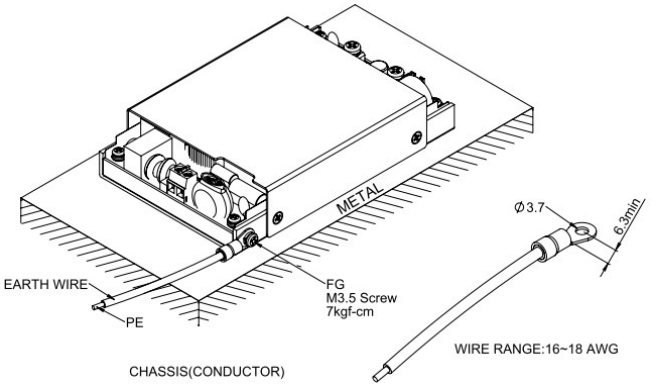

Figure 4

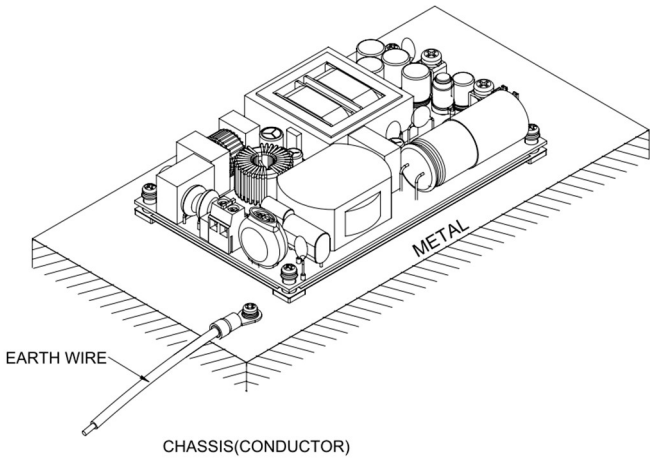

Figure 5

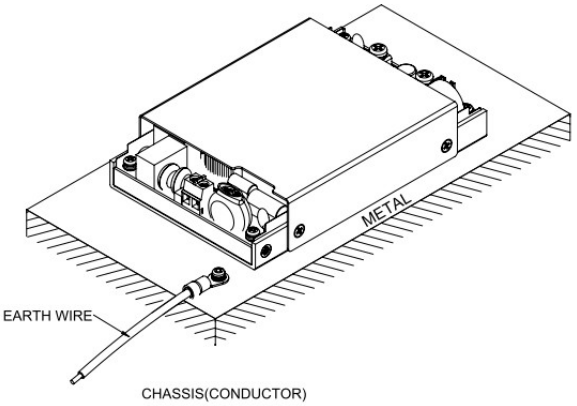

Figure 6

4.4 External Baseplate Cooling

The LFM550M series provide the baseplate cooling for customer to increasing heat dissipation. For example, adding a 381.0mmx381.0mmx2mm heatsink at the bottom of LFM550M, between the heatsink and LFM550M with thermal grease better than 0.83 W/m.K or thermal pad (PMP-P-400) to help heating ability. If customer choose the other heatsinks. LFM550M make sure of the heatsink R_{ca}=0.8℃/W or better and T_c point under 90℃.

Please refer to the following figure for installation. When the LFM550M series uses an external baseplate cooling solution, it's used at 350W for LFM550MXXXB and used at 450W for LFM550MXXXC. Please refer to the power derating curve in the specification.

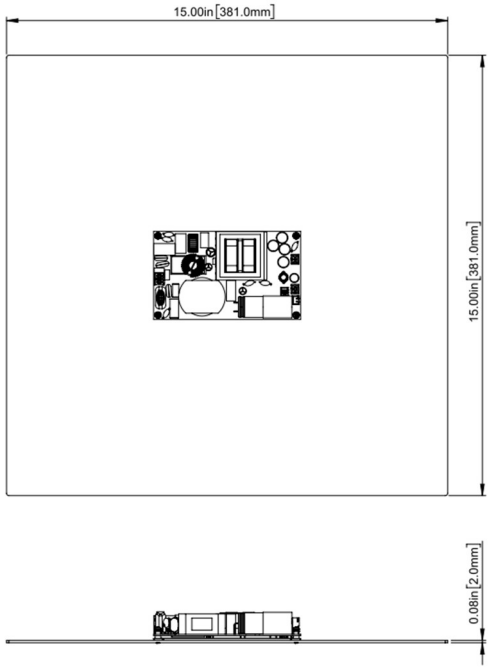

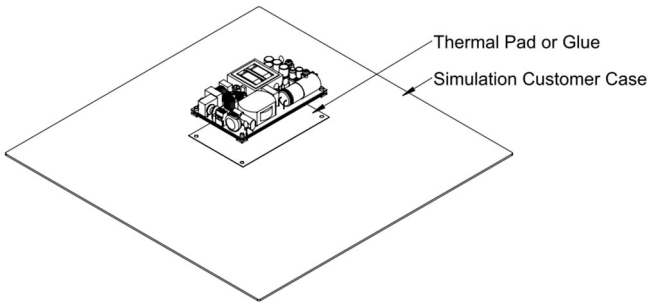

Thermal Pad: PMP-P-400 (P/N:G61236RC404)

Thermal Pad: PMP-P-400 (G61236RC404)

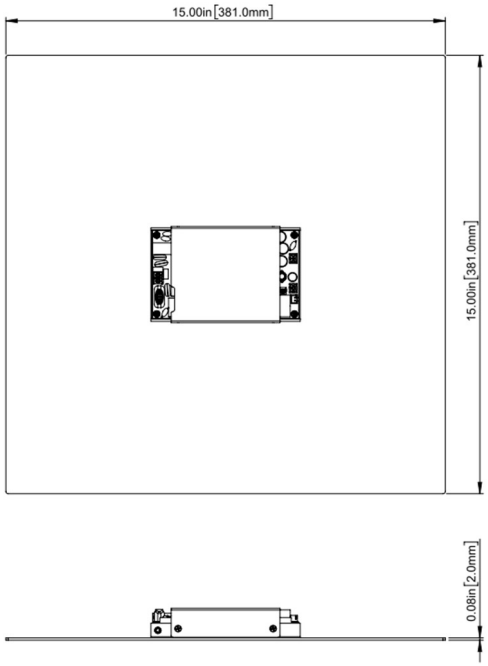

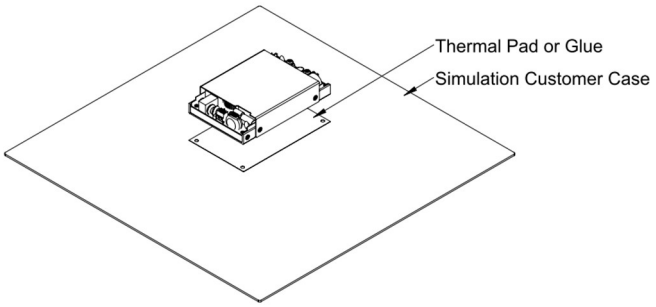

Thermal Pad: PMP-P-400 (P/N:G61236RC404)

Thermal Pad: PMP-P-400 (G61236RC404)

4.5 EMI Test

The LFM550M series Conductive EMI meets EN55011, FCC Part 18 Class B when test condition is Class I & Class II.

Radiation meet EN55011, FCC Part 18 Class B when test condition is Class I.

Radiation meet EN55011, FCC Part 18 Class A when test condition is Class II.

4.6 Mating Connectors

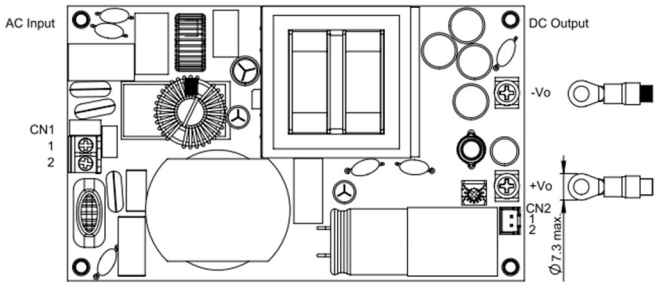

LFM550MXXXB Installation Diagram

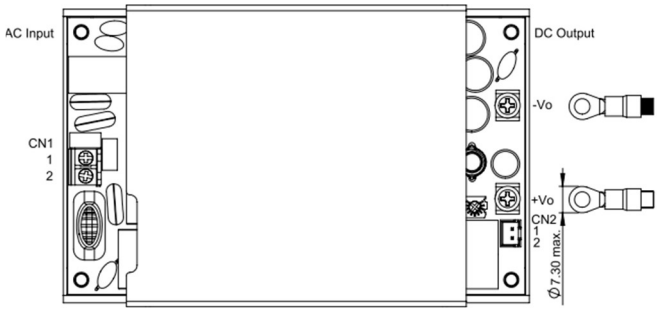

LFM550MXXXC Installation Diagram

AC Input Connector(CN1):ECE ETB22

Pin	Function	Mating Wire Range
1	ACL	14~16 AWG
2	ACN	

DC Output Connector(CN2):TKP 8822-02-NHB or equivalent

Pin	Function	Mating Housing	Terminal
1	Rs+	JST XHP-2 or equivalent	JST SXH-001T-P0.6N or equivalent
2	Rs-		

DC Output Connector:KANG YANG PCB-58M4

Function	The screw locked torque
+Vo	M4 7kgf-cm
-Vo	

5. Packing Information

The packing information for LFM550MXXXB series is showing as follows:

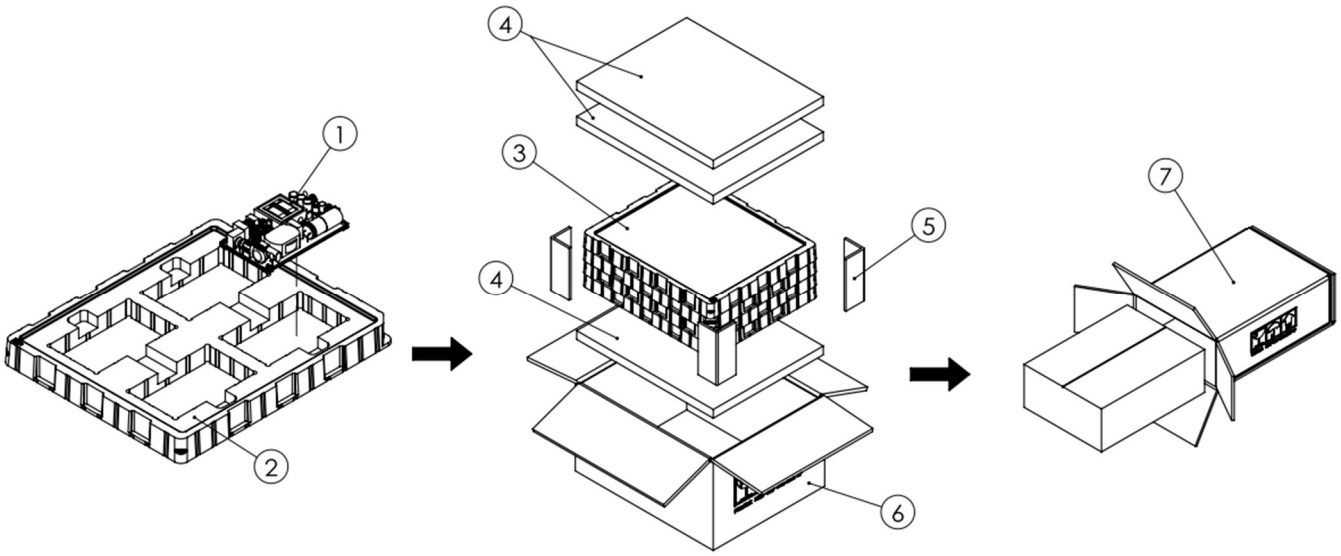

ITEM	PART NO.	NAME	OUTSIDE DIM(mm)	PCS
1	-	LFM550MXXXB Product	127x76.2x25.4	16
2	G64G20136	Antistatic Plastic blister	338.4x283.4x32	8
3	G64G20138	Antistatic Plastic blister	340x285x32.6	4
4	G64301087	Antistatic Foma	360x290x20	3
5	GDGT13903	Paper Angle Bead	120x50x50	4
6	G64211308	No.114 Inner Cardboard Box	364x294x200	1
7	G64114293	No.114 Cardboard Box	400x320x225	1

Each Box Packaging 16 PCS Products
Gross weight Ref. 8.2 Kg

The packing information for LFM550MXXXC series is showing as follows:

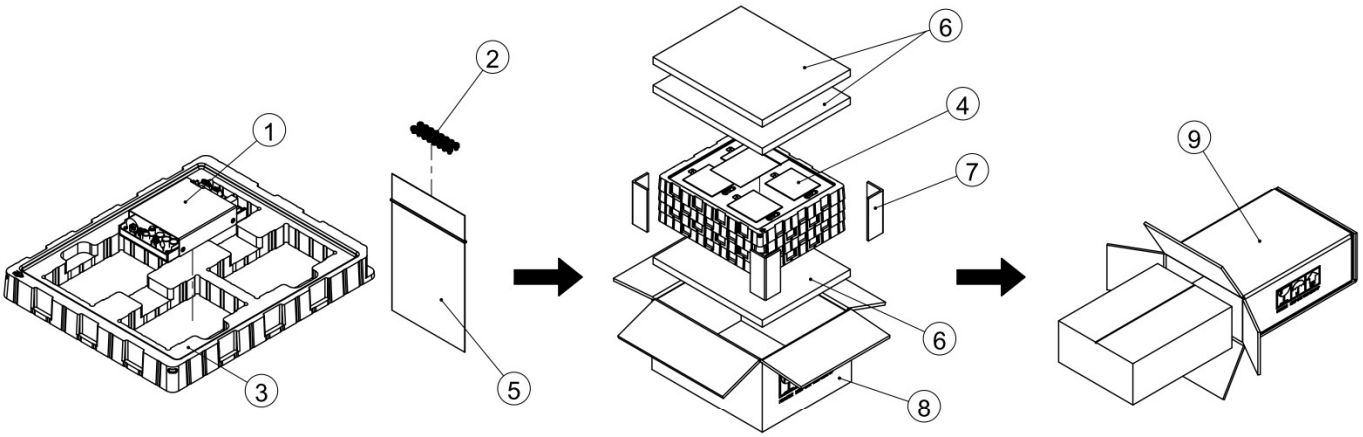

ITEM	PART NO.	NAME	OUTSIDE DIM(mm)	PCS
1	-	LFM550MXXXC Product	129.4x83.5x25.4	16
2	G75V2200000	Screw	M3.5x0.6	16
3	G64G20169	Antistatic Plastic blister	338.4x283.4x34.2	4
4	G64G20153	Antistatic Plastic blister	340x285x35	4
5	GDGT14902	Zipper Bag	100x70x0.04	1
6	G64301087	Antistatic Foma	360x290x20	3
7	GDGT13903	Paper Angle Bead	120x50x50	4
8	G64211308	No.114 Inner Cardboard Box	364x294x200	1
9	G64114293	No.114 Cardboard Box	400x320x225	1

Each Box Packaging 16 PCS Products
Gross weight Ref. 10.5 Kg

CINCON ELECTRONICS CO., LTD.

Headquarters:

14F, No.306, Sec.4, Hsin Yi Rd.
Taipei, Taiwan
Tel: 886-2-27086210
Fax: 886-2-27029852
E-mail: sales@cincon.com.tw
Web Site: https://www.cincon.com

Factory:

No. 8-1, Fu Kung Rd.
Fu Hsing Industrial Park
Fu Hsing Hsiang,
Chang Hua Hsien, Taiwan
Tel: 886-4-7690261
Fax: 886-4-7698031

Cincon North America:

1655 Mesa Verde Ave. Ste 180
Ventura, CA 93003
Tel: 805-639-3350
Fax: 805-639-4101
E-mail: info@cincon.com