100W AC-DC Medical Switch Power Adapter
TR100M Series
APPLICATION NOTE

Approved By:

Department	Approved By	Checked By	Written By
Research and Development Department	Ovid	Calvin	Kaimi
Design Quality Department	Benny	JoJo	

Content

1. INTRODUCTION **3**

2. ELECTRICAL BLOCK DIAGRAM **3**

3. MAIN FEATURES AND FUNCTIONS **4**

3.1 Operating Temperature Range 4

3.2 Output Protection (Over Current Protection) 4

4. APPLICATIONS **4**

4.1 Test Set-Up 4

4.2 Output Ripple and Noise Measurement 4

5. PACKING INFORMATION **5**

TR100M Series

Application Note V11 October 2025

1. Introduction

This application note describes the features and functions of Cincon's TR100M series of switch power adapter. These are highly efficient, reliable, compact, high power density, single output AC/DC switch power adapter. The switch power adapter is fully protected against short circuit and over-voltage conditions. Cincon's world class automated manufacturing methods, together with an extensive testing and qualification program, ensure that the TR100M series switch power adapter is extremely reliable.

2. Electrical Block Diagram

TR100M Series

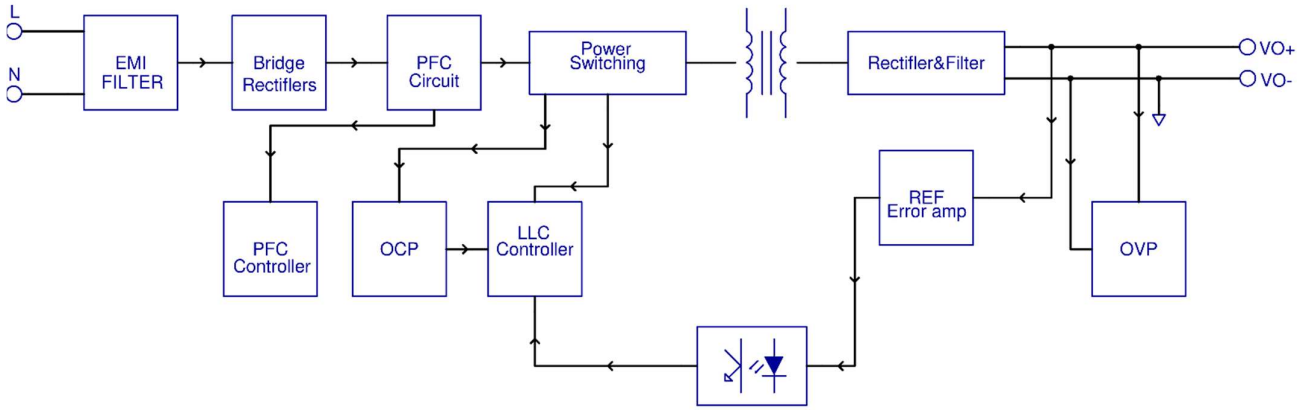

3. Main Features and Functions

3.1 Operating Temperature Range

The highly efficient design of Cincon's TR100M series switch power adapter has resulted in their ability to operate within ambient temperature environments from -20℃ to 70℃(40℃~70℃ with 2.5%/℃ de-rating).

Due consideration must be given to the de-rating curves when ascertaining the maximum power that can be drawn from the switch power adapter. The maximum power which can be drawn is influenced by a number of factors, such as

- Input voltage range
- Permissible output load (per derating curve)
- Effective heat sinks

3.2 Output Protection (Over Current Protection)

The switch power adapter provide full continuous short-circuit protection. The unit will auto recover once the short circuit is removed. To provide protection in a fault condition, the unit is equipped with internal over-current protection range, please refer to the specification sheet. The unit will operate normally once the fault condition is removed.

4. Applications

4.1 Test Set-Up

The basic test set-up to measure parameters such as efficiency and load regulation is shown in Figure 1. When testing the Cincon's TR100M series under any transient conditions, please ensure that the transient response of the source is sufficient to power the equipment under test. We can calculate the

- Efficiency
- Load regulation and line regulation

The value of efficiency is defined as:

$$\eta = \frac{Vo \times Io}{Pin} \times 100\%$$

Where:

V_o is output voltage

I_o is output current

Pin is input power

The value of load regulation is defined as:

$$Load\ reg1. = \frac{V_{FL} - V_{NL}}{V_{NL}} \times 100\%$$

Where:

V_{FL} is the output voltage at full load

V_{NL} is the output voltage at 60% load

$$Load\ reg2. = \frac{V_{FL} - V_{NL}}{V_{NL}} \times 100\%$$

Where:

V_{FL} is the output voltage at 60% load

V_{NL} is the output voltage at 20% load

The value of line regulation is defined as:

$$Line\ reg. = \frac{V_{HL} - V_{LL}}{V_{LL}} \times 100\%$$

Where:

V_{HL} is the output voltage of maximum input voltage at full load

V_{LL} is the output voltage of minimum input voltage at full load

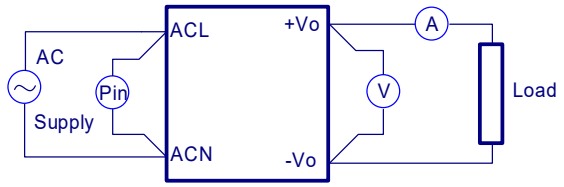

Figure 1. TR100M Series Test Setup

4.2 Output Ripple and Noise Measurement

The test set-up for noise and ripple measurements is shown in Figure 2. Measured method:

Add a C2=0.1uF ceramic capacitor and a C1=10uF electrolytic capacitor to output at 20 MHz Band Width.

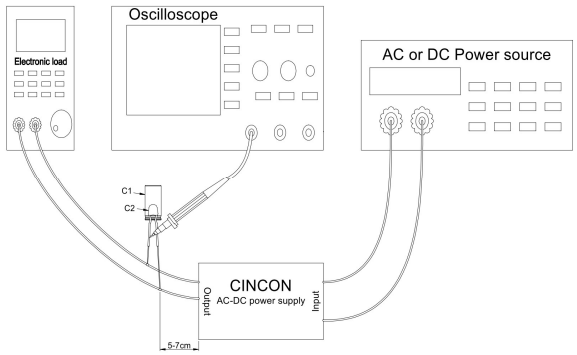

Figure 2. Output Voltage Ripple and Noise Measurement Set up

5. Packing Information

The packing information for TR100MXXX series is showing as follows:

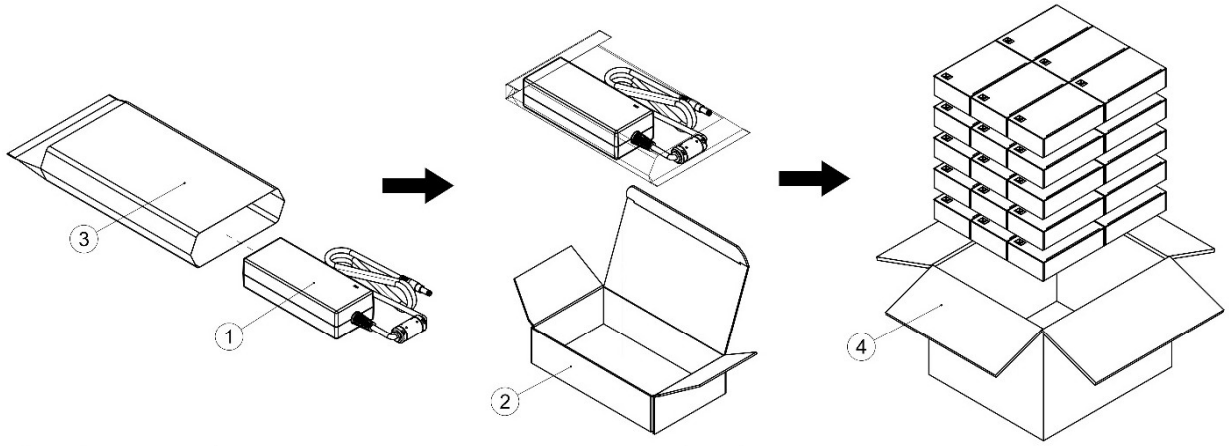

ITEM	PART NO.	NAME	OUTSIDE DIM	PCS
1	G98~	TR100MXXX Product	142x58x37mm	30
2	G64205321	Inner Box	185x110x50mm	30
3	G64D15057	Plastic Bag	155x245mmx0.08mm	30
4	G64114345	No.163 Cardboard Box	385x345x280mm	1

Each Box Packaging 30 PCS Products

Gross weight Ref. 16.5 Kg

CINCON ELECTRONICS CO., LTD.

Headquarters:

14F, No.306, Sec.4, Hsin Yi Rd.
Taipei, Taiwan
Tel: 886-2-27086210
Fax: 886-2-27029852
E-mail: sales@cincon.com.tw
Web Site: https://www.cincon.com

Factory:

No. 8-1, Fu Kung Rd.
Fu Hsing Industrial Park
Fu Hsing Hsiang,
Chang Hua Hsien, Taiwan
Tel: 886-4-7690261
Fax: 886-4-7698031

Cincon North America:

1655 Mesa Verde Ave. Ste 180
Ventura, CA 93003
Tel: 805-639-3350
Fax: 805-639-4101
E-mail: info@cincon.com